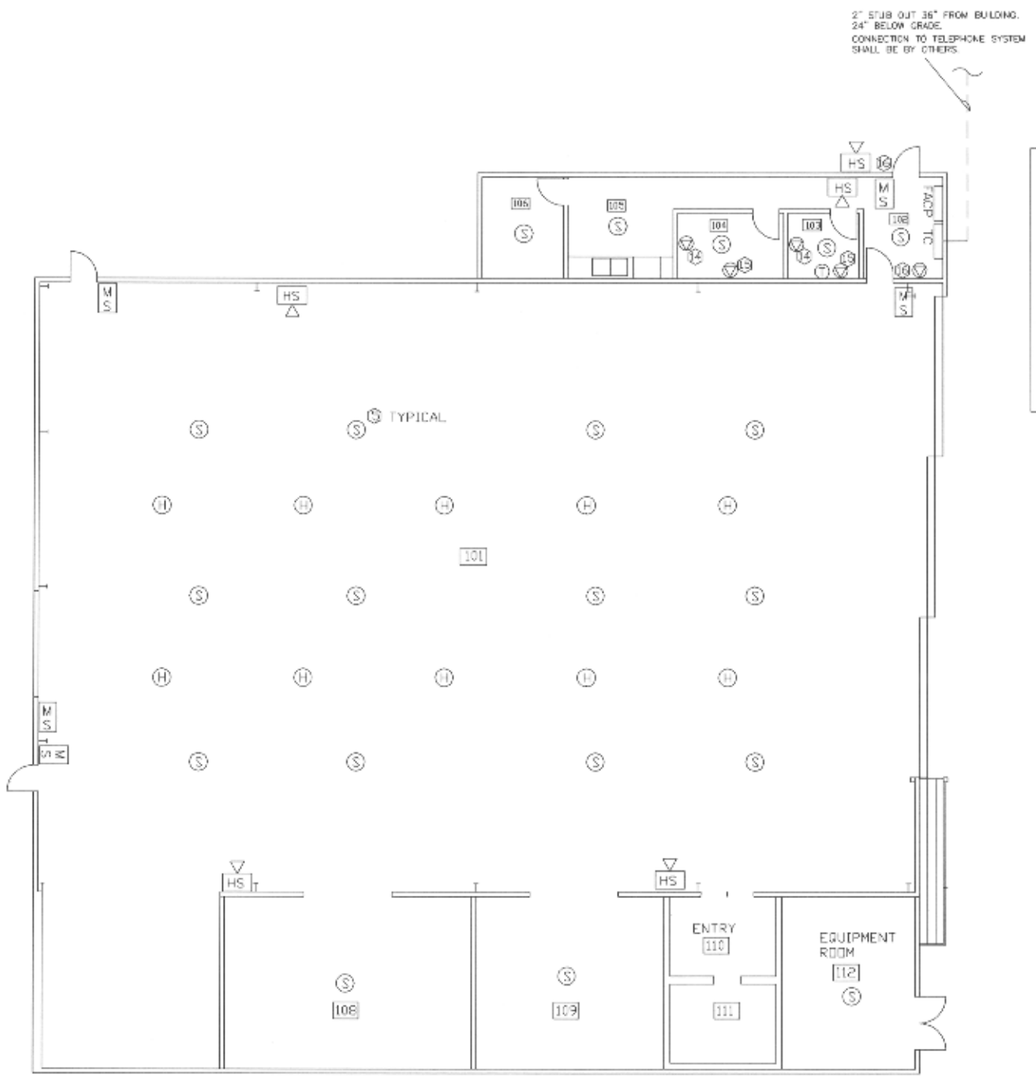

SPECIAL SYSTEMS PLAN
SCALE:
1/8"=1'-0"

FAULT CURRENT ANALYSIS/OPTIONS

LOAD SUMMARY WITH 11-15-2001 MODIFICATIONS:
PANEL H, 247,000VA @ 277/480 VAC = 297 AMPS
PANEL L, 60, 00VA @ 120/208 VAC = 166 AMPS
PANEL M, 224,000 VA @ 277/480 VAC = 270 AMPS
PANEL N, 43,000 VA @ 277/480 VAC = 270 AMPS

FAULT CURRENT CALCULATIONS
500 KVA TRANSFORMER 480 VOLT SECONDARY @ 4.5%Z
500/(.48X1.732)= 601 AMPS FULL LOAD CURRENT
601/.045=13,400 AMPS FAULT CURRENT
GEAR MUST BE RATED FOR 18 KA MINIMUM

FIRE ALARM SYSTEM NOTES: (FASN)

1. FIRE ALARM EQUIPMENT CATALOG NUMBERS ARE FOR NOTIFIER EQUIPMENT.
   ANY MANUFACTURER IN BUSINESS FOR 5 YEARS OR MORE OFFERING EQUAL
   PRODUCTS MAY BE USED AS APPROVED.
2. FIRE ALARM PANEL SHALL BE A SGL404 OR EQUAL. TERMINATE ALL FIRE ALARM
   WIRING IN FACP. HR TO L-10 AS SCHEDULED.
3. SMOKE DETECTORS SHALL BE BRK 1400 OR EQUAL.
4. HEAT DETECTORS SHALL BE HD80 OR EQUAL.
5. PULL STATIONS SHALL BE N-BG-10 OR EQUAL.
6. HORN STROBES SHALL BE 7001-12 OR EQUAL.
7. FIRE ALARM SYSTEM SHALL BE INSTALLED PER NFPA-72.
8. PROVIDE BATTERIES SIZED PER NFPA-72.
9. CONNECT ALL FIRE ALARM EQUIPMENT TO FACP.
10. PROVIDE INITIATION AND DETECTION ZONES (I & D) FOR HIGH BAY, ADDITIONAL I & D ZONES FOR OFFICE/ADMIN AREA, AND ADDITIONAL I & D ZONES FOR NEW MAINTENANCE AREA.

FIRE ALARM LEGEND

- FACP — FIRE ALARM CONTROL PANEL (FACP) SEE FASN 1
- MS — MANUAL PULL STATION SEE FASN 5
- S — SMOKE DETECTOR SEE FASN 3
- HS — HORN STROBE SEE FASN 6
- H — HEAT DETECTOR SEE FASN 4

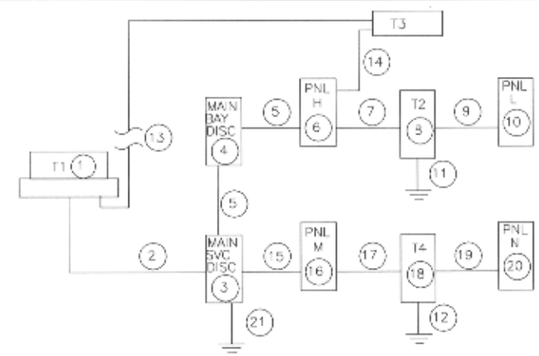

SERVICE ENTRANCE/ONE LINE DIAGRAM

SERVICE ENTRANCE/ONE LINE NOTES:

1. REPLACE EXISTING 150KVA PAD MOUNT TRANSFORMER T1 WITH NEW 500 KVA PAD MOUNT TRANSFORMER T1. PROVIDE CONNECTIONS FOR NEW SERVICE CONDUCTORS AS REQUIRED.
2. PROVIDE 2 RUNS OF 4-500 MCM THW IN 4" PVC CONDUIT UNDERGROUND FROM T1 TO MSD.
3. PROVIDE 800A, 277/480 VOLT MAIN SERVICE DISCONNECT, CUTLER HAMMER PRL4B OR APPROVED EQUAL, WITH 800 AMPERE MAIN CIRCUIT BREAKER IN NEMA 3R ENCLOSURE. PROVIDE 2 BRANCH CIRCUIT BREAKERS RATED 400 AMPERES EACH. MAIN AND BRANCH CIRCUIT BREAKERS SHALL BE CUTLER HAMMER MDL, OR APPROVED EQUAL.
4. PROVIDE PROVIDE 400 A, 277/480 VOLT MAIN BAY DISCONNECT, WITH 400 AMPERE FUSE(S) IN NEMA 3R ENCLOSURE.
5. PROVIDE 4-500 MCM CU THW WITH 350 MCM GROUND IN 4" RMC CONDUIT FROM MSD TO MBD AND FROM MBD TO PANEL H.
6. PROVIDE 277/480 VOLT PANEL H, 400 AMPERE MAIN LUG ONLY, CUTLER HAMMER PRL2A OR APPROVED EQUAL. SURFACE MOUNT IN NEMA 1 ENCLOSURE. PROVIDE BRANCH CIRCUIT BREAKERS AS SCHEDULED.
7. PROVIDE 3-#3 CU THW WITH #3 CU GROUND IN 1-1/4" RMC FROM PANEL H TO T2.
8. PROVIDE 60 KVA 480 TO 120/208 VOLT DRY TYPE TRANSFORMER T2 IN NEMA 1 ENCLOSURE.
9. PROVIDE 4-#4/0 CU THW WITH #4/0 CU GROUND IN 2-1/2" RMC FROM T2 TO PANEL L.
10. PROVIDE 120/208 VOLT PANEL L, WITH MAIN AND BRANCH CIRCUIT BREAKERS AS SCHEDULED.
11. PROVIDE #500 MCM CU TO FOUNDATION STEEL AND BUILDING STEEL. BOND TO INTERIOR METAL WATER PIPES AND TO MSD GROUND TERMINAL PER NEC ARTICLE 250.
12. PROVIDE #500 MCM CU TO BUILDING STEEL. BOND TO INTERIOR METAL WATER PIPES AND TO MSD GROUND TERMINAL PER NEC ARTICLE 250.
13. EXISTING UNDERGROUND FEED, SHALL BE DISCONNECTED AFTER T3 IS CONNECTED TO PANEL H.
14. PROVIDE 4-#2 CU THW WITH #2 CU GROUND UNDERGROUND FROM PANEL H TO EXISTING TRANSFORMER T3.
15. PROVIDE 4-500 MCM CU THW WITH 350 MCM CU GROUND IN 4" RMC FROM MSD TO PANEL M.
16. PROVIDE 277/480 VOLT PANEL M, 400 AMPERE MAIN CIRCUIT BREAKER, CUTLER HAMMER PRL2A OR APPROVED EQUAL. SURFACE MOUNT IN NEMA 1 ENCLOSURE. PROVIDE BRCUIT BREAKERS AS SCHEDULED.
17. PROVIDE 3-#4 CU THW WITH #4 GROUND FROM PANEL M TO T4.
18. PROVIDE 45 KVA 480 TO 120/208 VOLT DRY TYPE TRANSFORMER T4 IN NEMA 1 ENCLOSURE.
19. PROVIDE 4-#2/0 CU THW WITH #2/0 GROUND IN 2" RMC FROM T4 TO PANEL N.
20. PROVIDE 120,208 VOLT PANEL L, WITH MAIN AND BRANCH CIRCUIT BREAKERS AS SCHEDULED.
21. PROVIDE 500 MCM CU TO FOUNDATION STEEL AND BUILDING STEEL. BOND TO INTERIOR METAL WATER PIPES PER NEC ARTICLE 250.

Cottonwood Engineering Corp.
920 IAWAI
ALAMOGORDO, NEW MEXICO 88310
PHONE: 505-434-9195
E-MAIL: COTTNWOOD@LOOKINGGLASS.NET

White Sands Missile Range, NM
Drawings prepared by Cottonwood Engineering, Alamogordo, New Mexico

PROJECT NO:
DATE: 11/15/01
DRAWN BY: AKK
REVISIONS:
12/01/01
SHEET
E3
OF 3

FOR INFORMATION ONLY AMENDMENT 3